4 Wheel Drive (4WD) System > General Information > Specifications

Specifications

Items		Specification
Oil	Type	Hypoid gear oil, SAE 75w/90, API GL-5
	Capacity	0.6L (0.16 U.S.gal., 0.63 U.S.qt, 0.53 Imp.qt.)

4 Wheel Drive (4WD) System > Transfer Assembly > Front Wheel Transfer Assembly > Components and Components Location

Components

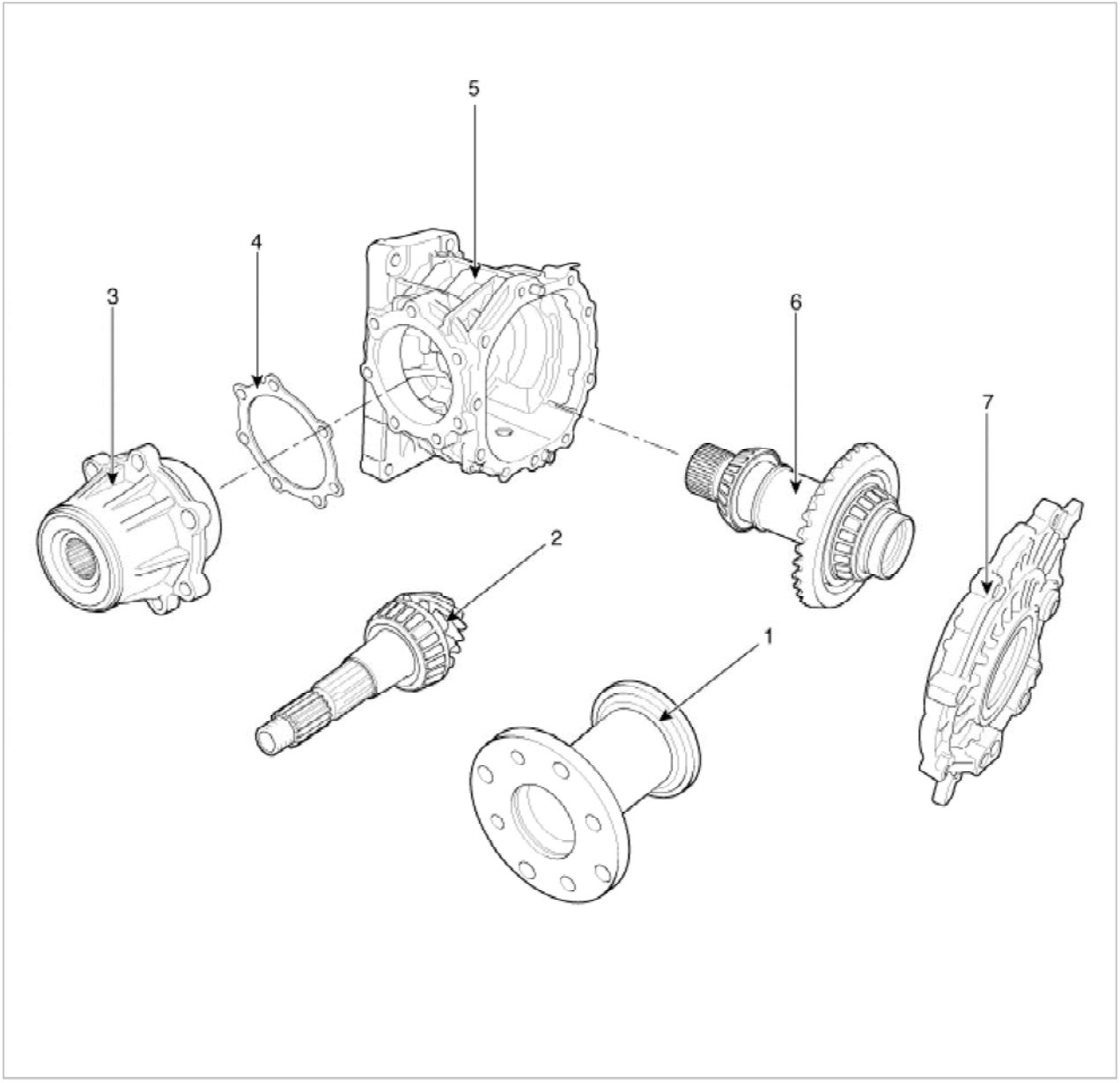

1. Rear flange assembly	5. Transfer housing
2. Pinion shaft	6. Hypoid gear shaft assembly
3. Pinion case	7. Transfer cover
4. Spacer	

mcx30.com

Inspection

Transfer Oil Inspection

Transfer oil should be inspected and refilled every 30 months or 37,500 miles.

Tightening torque
Oil drain pulg(A) :
39.2~58.8N.m (4.0~6.0kgf.m, 28.9~43.4lb-ft)
Filler pulg(B) :
39.2~58.8N.m (4.0~6.0kgf.m, 28.9~43.4lb-ft)

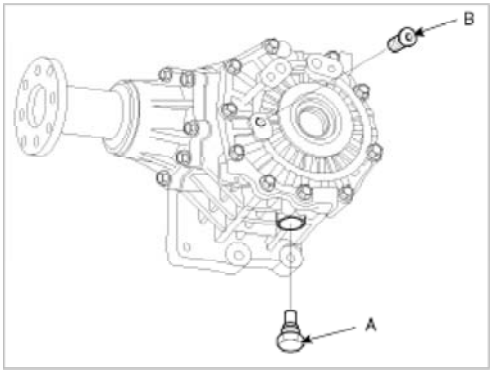

Transfer Oil Replacement

1. Transfer oil is not replaced in normal condition.But it shoud be replaced every 75,000 miles in severe driving conditions.

NOTE

Severe driving conditions
1. Driving in dusty, rough roads
2. Drivng in mountains areas
3. Driving for patrol car, taxi, commercial car or vehicle towing
4. Driving over 170Km/h

CAUTION

Transfer oil should be replaced if the transfer assembly is fall into the water.

Removal

1. Disconnect the (-) terminal from the battery.
2. Lift up the vehicle.
3. Remove the front muffler
4. Remove the propeller shaft bolts.(A-4ea)

Tightening torque :
49.0~68.6N.m (5.0~7.0kgf.m, 36.2~50.6lb-ft)

CAUTION

Install the propeller shaft to be near runout marking (Transfer assembly 1ea, Propeller shaft 1ea) each other.

mcx30.com

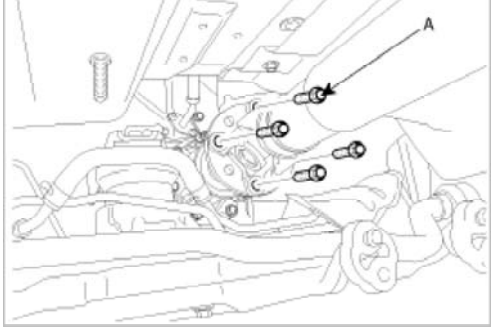

5. Remove the right driveshaft (passanger side) from the transfer case. (Refer to "Drive shaft" in DS group)
6. Remove the roll lod bracket(C) after removing bolt(A,B).

Tightening torque :
(A) 107.9~127.5N.m (11~13kgf.m, 79.6~94.1lb-ft)
(B) 49.0~63.7N.m (5.0~6.5kgf.m, 36.2~47.0lb-ft)

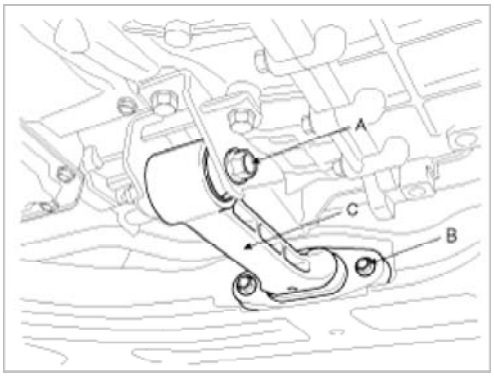

7. Remove the transfer case up and down mounting bolt (A-4ea, B-1ea).

Tightening torque :
(A, B) 60.8~65.7N.m (6.2~6.7kgf.m, 44.8~48.5lb-ft)

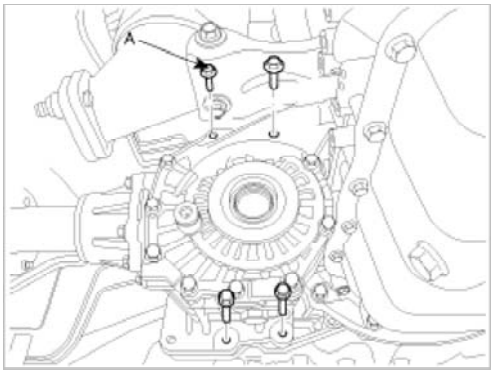

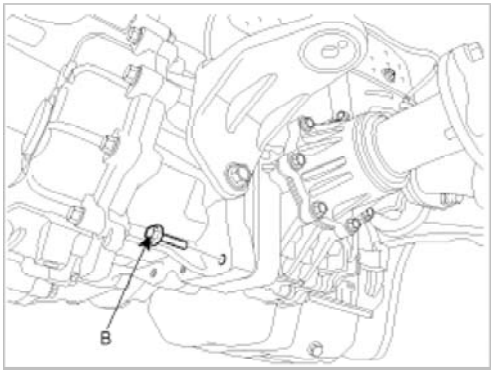

8. Remove the transfer case with the lever after supporting the transfer case with a jack.

mcx30.com

Installation

1. Installation is the reverse of removal.

NOTE

- Be careful not to damage the O-ring (A). If the O-ring take damage, replace new one.
- Smear involute splines (B) all covering with molybdenum type high pressure grease.

TECHLUBE MEGAMAX - ALPHA OR EQUIVALENT

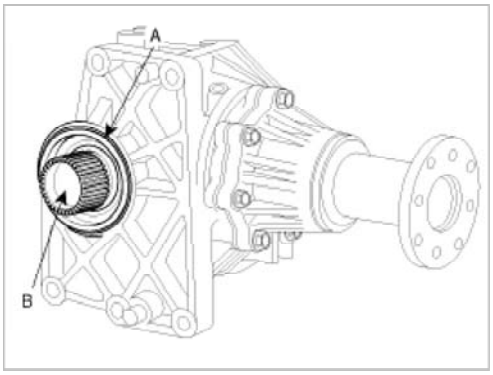

4 Wheel Drive (4WD) System > 4WD Control System > 4WD ECU > Components and Components Location

Components Location

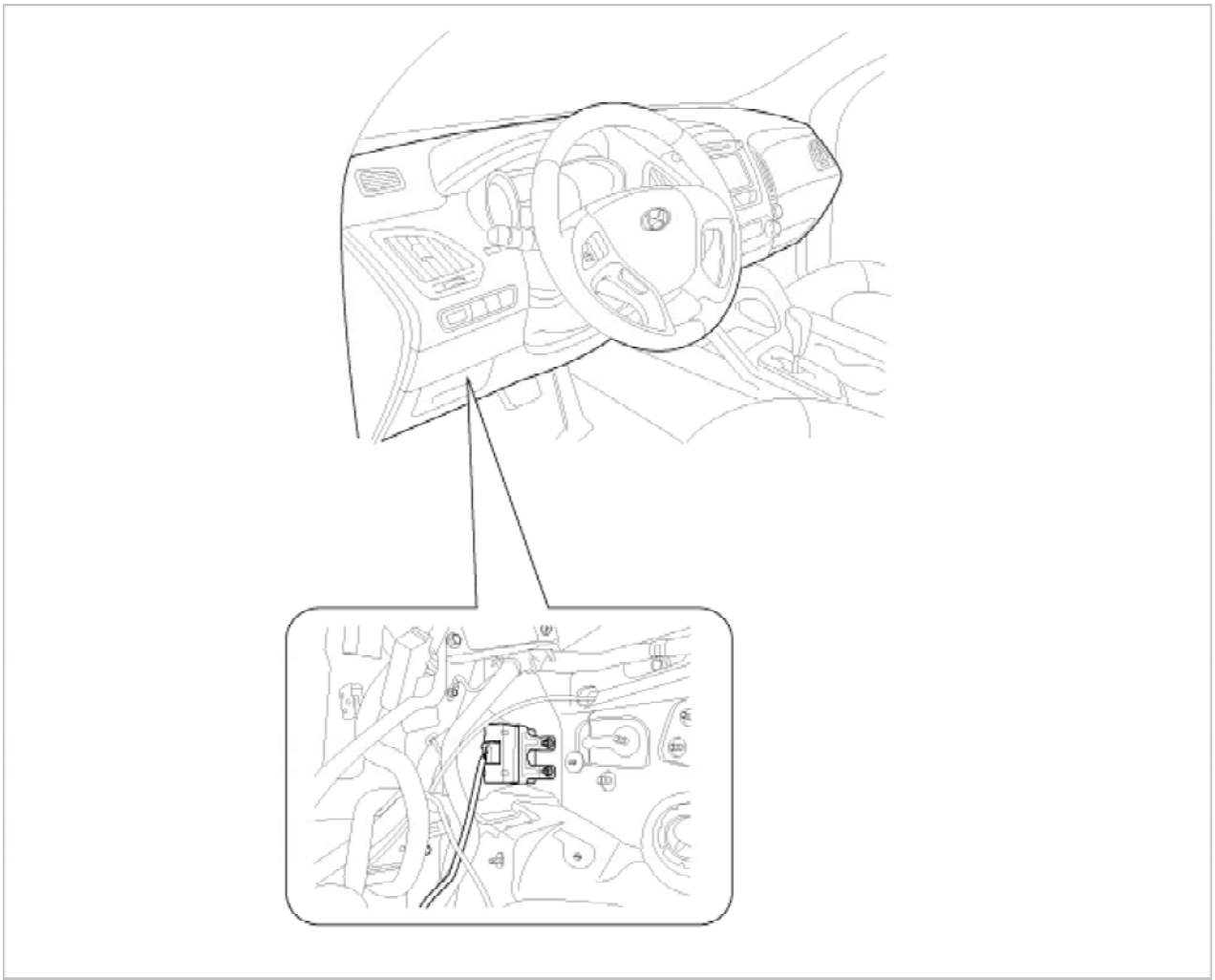

mcx30.com

4 Wheel Drive (4WD) System > 4WD Control System > 4WD ECU > Schematic Diagrams

1. 4WD ECU Harness connector

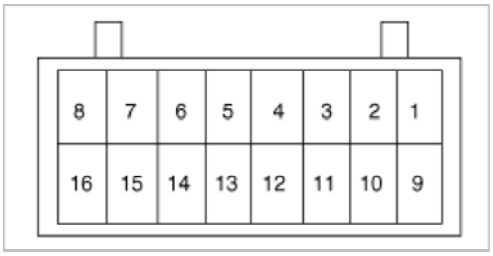

2. 4WD ECU Terminal Function

Pin No.	Description
1	NC
2	NC
3	NC
4	CAN HIGH
5	IG
6	BATTERY
7	NC
8	4WD SOL +
9	LOCK MODE SW
10	NC
11	NC
12	CAN LOW
13	NC
14	NC
15	GROUND
16	4WD SOL -

4 Wheel Drive (4WD) System > 4WD Control System > 4WD ECU > Description and Operation

Description

Four Wheel Drive (4WD) transfer mode selection

1. AUTO MODE:

CAUTION

- When driving in 4WD AUTO mode, the vehicle operates similar to conventional 2WD vehicles under normal operating conditions. However, if the system determines that there is a need for the 4WD mode, the engine's driving power is distributedto all four wheels automatically without driver intervention.
- When driving on normal roads and pavement, the vehicle moves similar to conventional 2WD vehicles.

2. LOCK MODE:

CAUTION

- This mode is used for climbing or descending sharp grades, off-road driving, driving on sandy and muddy roads, etc., to maximize traction.
- This mode automatically begins to deactivate at speeds above 30 km/h (19 mph) and is shifted to 4WD AUTO mode at speed above 40 km/h (25 mph). If the vehicle speed decelerates to below 30 km/h (19 mph), however,

mcx30.com

Operation

- Normal driving situation: 2WD base driving
- 4WD driving in driving situations (rapid activation, cornering etc.)

1. Input the information from each sensor in vehicle
   A. Input torque (Throttle position sensor)
   B. Cornering situation (Steering angle sensor)
   C. Vehicle speed and different wheel speed front &rear (Wheel speed sensor)
   D. Braking situation (Brake signal and ABS signal)
2. Distributed the required driving force after 4WD ECU operates.
3. EMC (Electric Magnetic Clutch) operates the primary clutch.

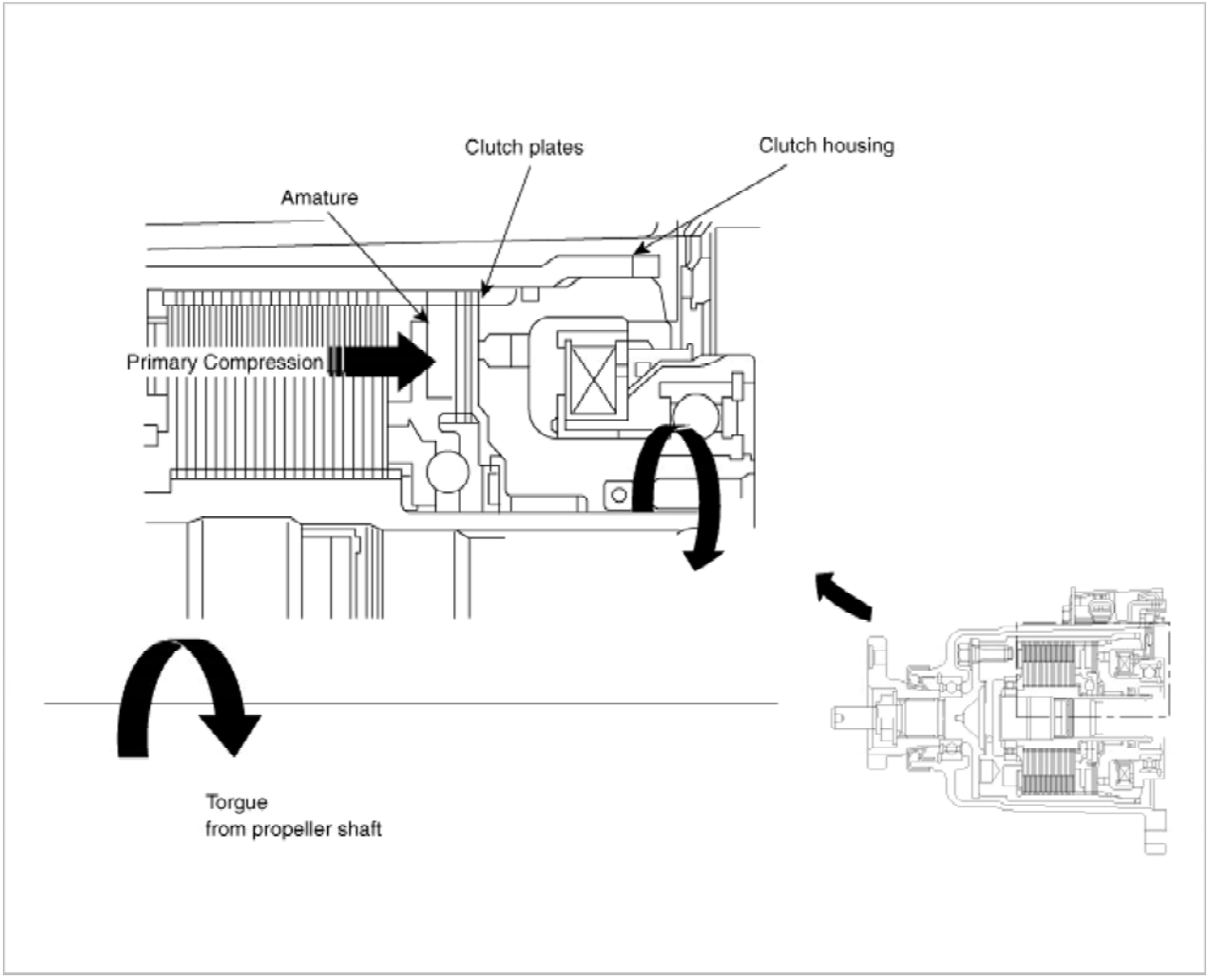

4. Control the cam's opening gap by operation of primary clutch.

mcx30.com

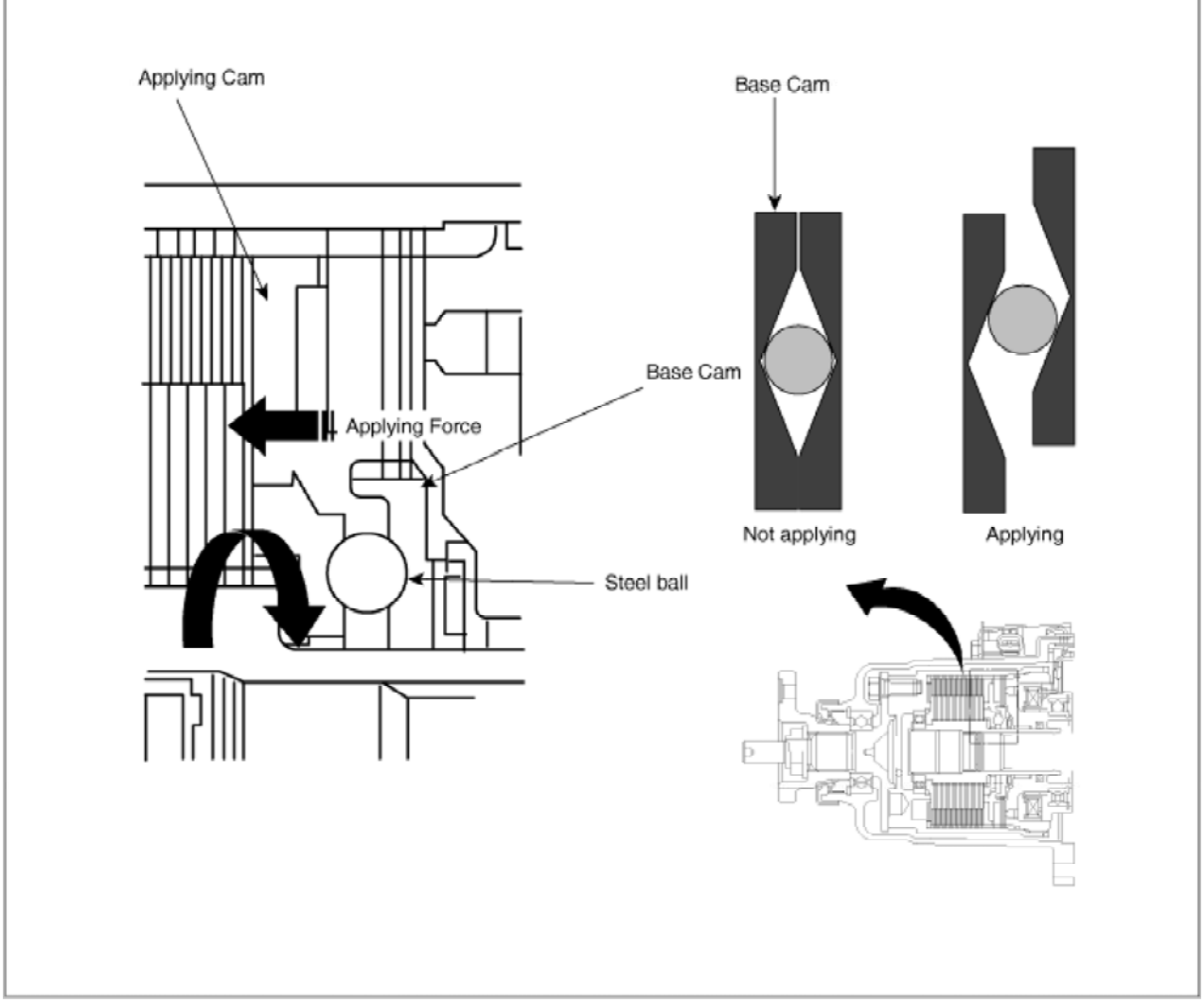

5. Control the slip of inner & outer plate.
   Control variably the driving force distribution to optimize front & rear driving force.

mcx30.com

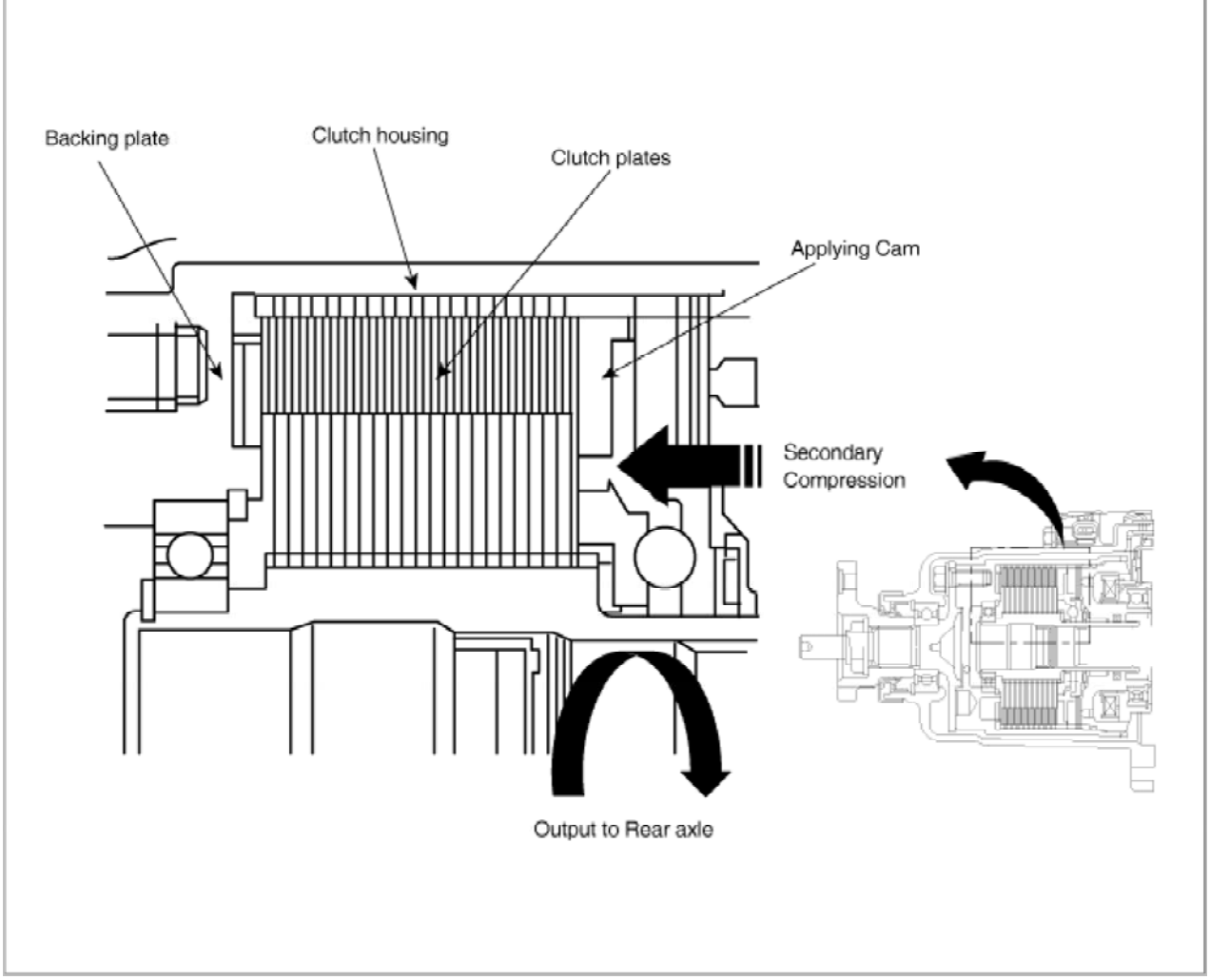

4 Wheel Drive (4WD) System > 4WD Control System > 4WD ECU > Repair procedures

Replacement

1. Remove the lower panel. (Refer to "Crash Pad" in BD group)
2. Remove the IPM.(Refer to "Fuses and Relays" in BE group)
3. Remove the parking brake pedal.(Refer to "Parking Brake System" in BR group)
4. Remove the 4WD ECU(C) after removing the nut (A-2ea) and the connector (B).

Tightening torque:
9.8 ~ 11.8 N.m (1.0 ~ 1.2 kgf.m, 7.2 ~ 8.7 lb-ft)

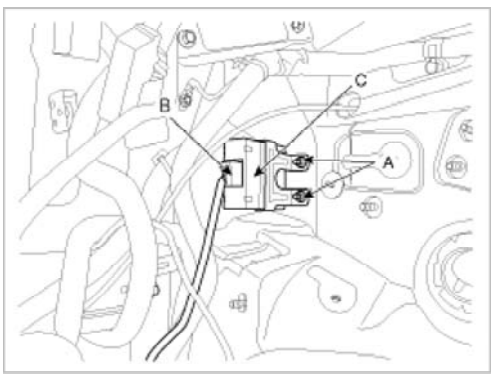

mcx30.com

(ITCC) > Components and Components Location

Components

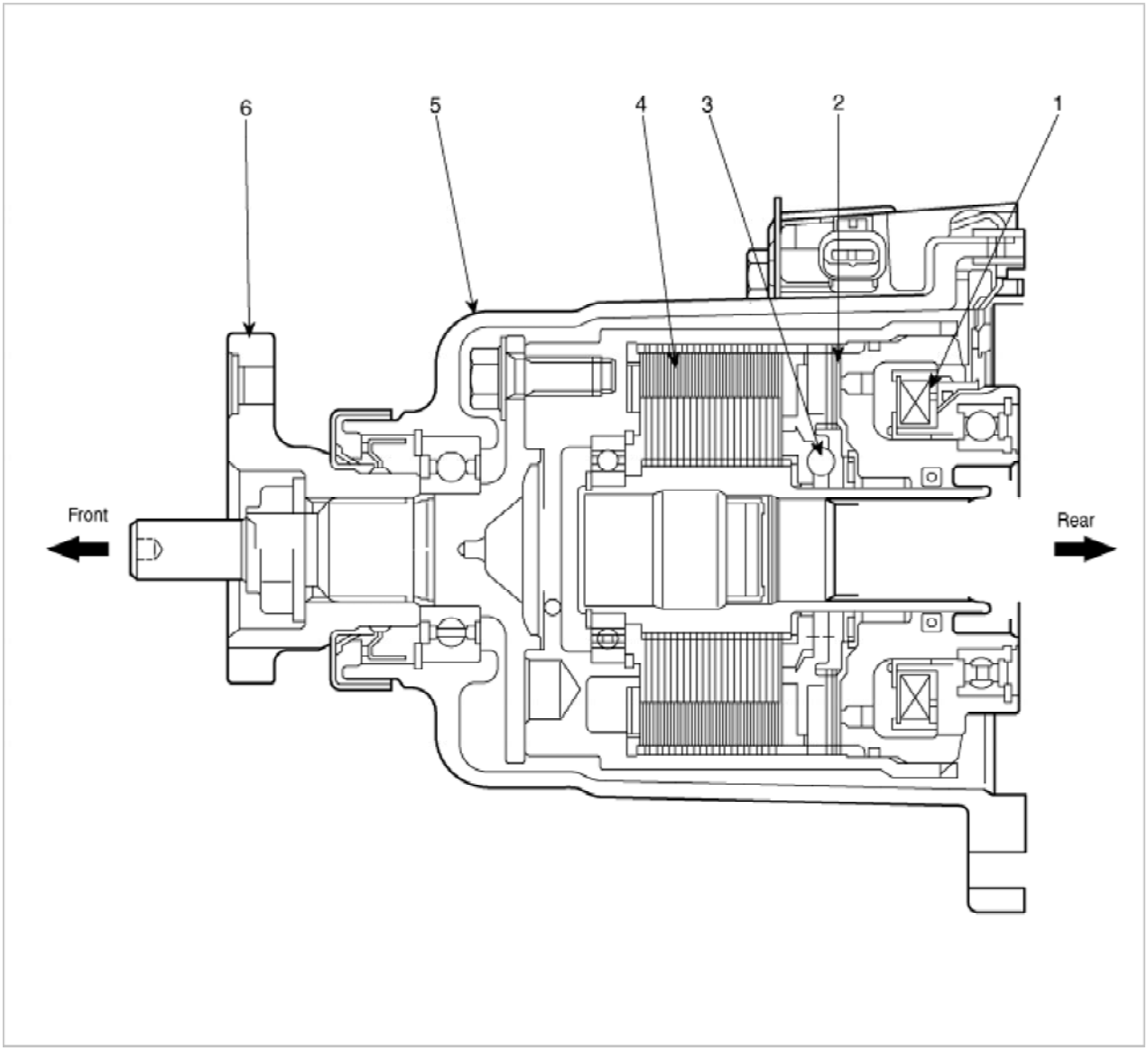

1. Magnetic Clutch 2. Pilot clutch 3. Cam	4. Main clutch 5. Housing 6. Flange

4 Wheel Drive (4WD) System > Coupling Assembly > Intelligent Torque controlled Coupling (ITCC) > Repair procedures

Removal

1. Remove the 4WD coupling assembly bolts (A-3ea) mounted to the rear propellar shaft (B).

Tightening torque :
49.0~68.6N.m (5.0~7.0kgf.m, 36.2~50.6lb-ft)

mcx30.com

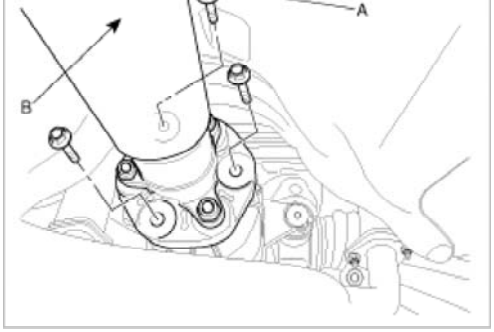

2. Using a flat tool, separate the propellar shaft from 4WD coupling assembly.
3. Remove the electric magnetic clutch connector(A).

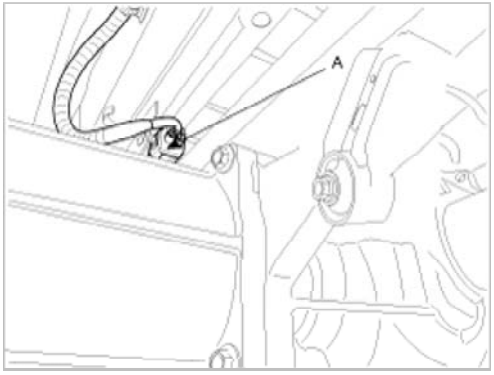

4. Remove the 4WD coupling assembly mounting bolts (A-4ea).

Tightening torque :
58.8~63.7N.m (6.0~6.5kgf.m, 43.4~47.0lb-ft)

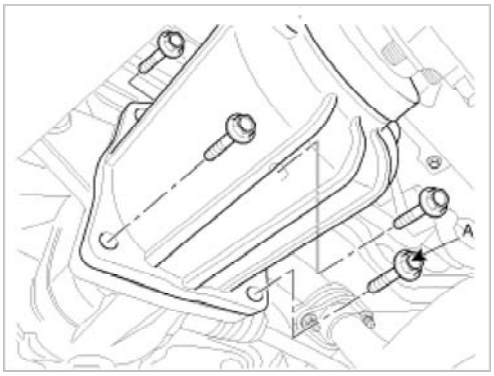

5. Using a flat tool, separate the 4WD coupling assembly from the rear differential carrier assembly.

Installation

1. Installation is the reverse of removal.

NOTE

- Grease the drive gear of the differential carrier assembly.

  High pressure grease:
  KLUBER MICROLUBE GNY 202 or equivalent
  GREASE-TRANSMISSION (MS511-55, TMG-2)

- Spread sealant on the matching face of coupling & differential carrier.

  Sealant material
  FIPG(Formed in Place Gaskets)-B (MS721-40) or equivalent to LT5702

mcx30.com

- Remove oil on the matching face before spread sealant.
- Refer to instruction drawing for spreading line.
- Staring point anding point should be overlapped (min.10mm(0.3937in.))
- Be sure to assemble part "Coupling & Differential carrier" within 3 minutes after spread sealant.

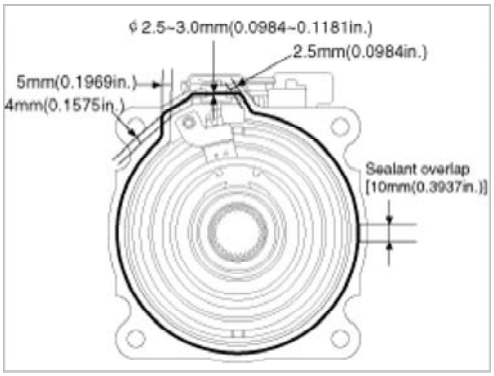

mcx30.com